Specification sheet LX 1871

Roof drainage system
Series 84 DRAINLET®
Overload-free main drainage

Building-related design - please contact LOROWERK

Main drainage

Gravity flow

Silent

Discharge rate:	**0,1 - 6,2 l/sec**
Water height:	**35 mm**
Roof penetration:	**-**
Diameter:	**DN 100**
LX-Number:	**LX 1871**
Weir height:	**0 mm**
Drain:	**ventilated**
Downpipe:	**not ventilated**
Downpipe height:	**4,2 m**
Drainage:	**in sewer**
Flange:	**Clamping flange**

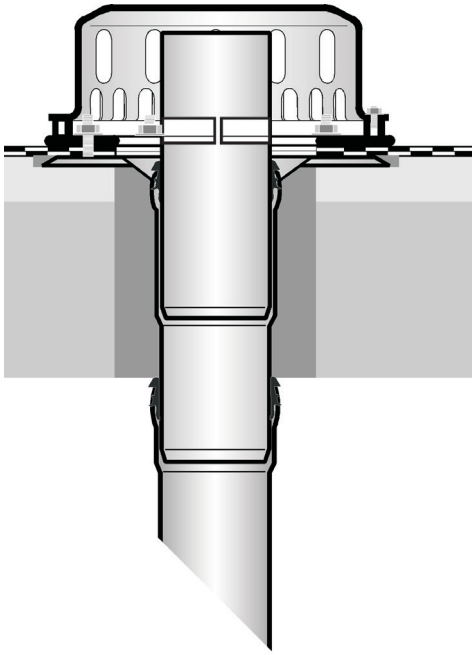

LX 1871 Piece list

1 x Art.-Nr. 41410.100X Flat roof drain for overload-free main drainage

hQ - Head Discharge curve

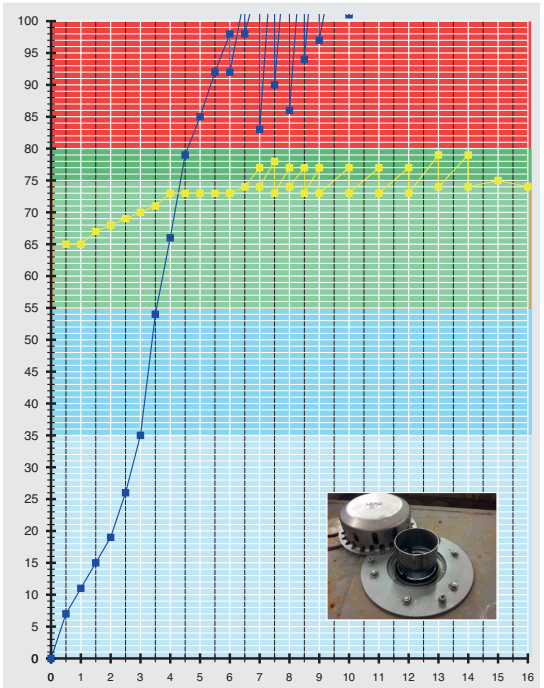

CAD

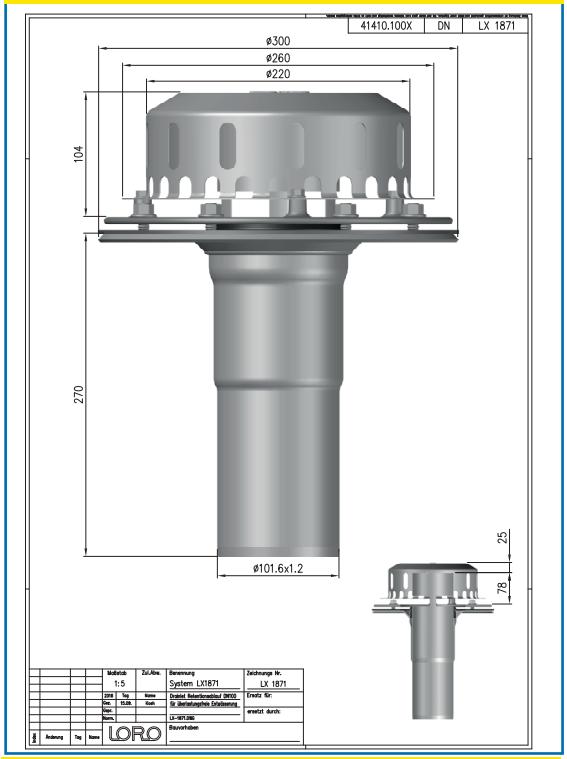

Systempower | **Systemshape**

Water height	mm	15	20	25	30	35	40	45	50	55	60	65	70	75	80	85	90	95	100
Discharge	l/sec	1,5	2,1	2,4	2,7	3,0	3,1	3,3	3,4	3,5	3,75	4,0	4,15	4,35	4,6	5,0	5,3	5,75	6,2
		Silent Power																	

LORO-X Overload-free main drainage

LX1871-5X

Roof drainage for overload-free main drainage
Art.-No. 41410.100X
Weight 5,6 kg
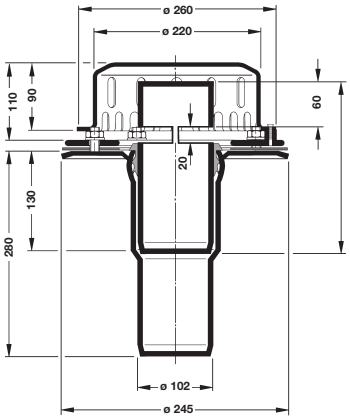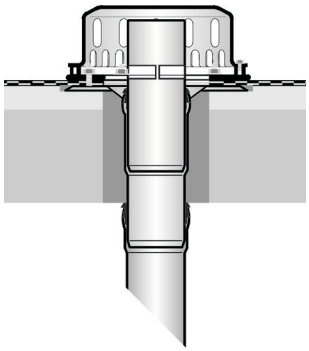
with clamping flange
for bituminous roofing sheets